Cambridge International Examinations
Cambridge International General Certificate of Secondary Education

CANDIDATE NAME	
CENTRE NUMBER	
CANDIDATE NUMBER	

CHEMISTRY **0620/41**

Paper 4 Theory (Extended) **May/June 2018**

1 hour 15 minutes

Candidates answer on the Question Paper.

No Additional Materials are required.

READ THESE INSTRUCTIONS FIRST

Write your Centre number, candidate number and name on all the work you hand in.
Write in dark blue or black pen.
You may use an HB pencil for any diagrams or graphs.
Do not use staples, paper clips, glue or correction fluid.
DO **NOT** WRITE IN ANY BARCODES.

Answer **all** questions.
Electronic calculators may be used.
A copy of the Periodic Table is printed on page 12.
You may lose marks if you do not show your working or if you do not use appropriate units.

At the end of the examination, fasten all your work securely together.
The number of marks is given in brackets [ ] at the end of each question or part question.

The syllabus is approved for use in England, Wales and Northern Ireland as a Cambridge International Level 1/Level 2 Certificate.

This document consists of **12** printed pages.

© UCLES 2018

CAMBRIDGE International Examinations

www.root19.com +91 - 9969 353 391

1 Substances can be classified as elements, compounds or mixtures.

(a) What is meant by the term *compound*?

.....

.....

..... [2]

(b) Mixtures can be separated by physical processes.

A sequence of physical processes can be used to separate common salt (sodium chloride) from a mixture containing sand and common salt only.

Give the order and the correct scientific term for the physical processes used to separate the common salt from the mixture.

1 .....

2 .....

3 .....
[4]

The boiling points of four different alcohols, **A**, **B**, **C** and **D**, are shown.

alcohol	**A**	**B**	**C**	**D**
boiling point / °C	56	78	122	160

(c) A student suggested that the apparatus shown could be used to separate the mixture of alcohols.

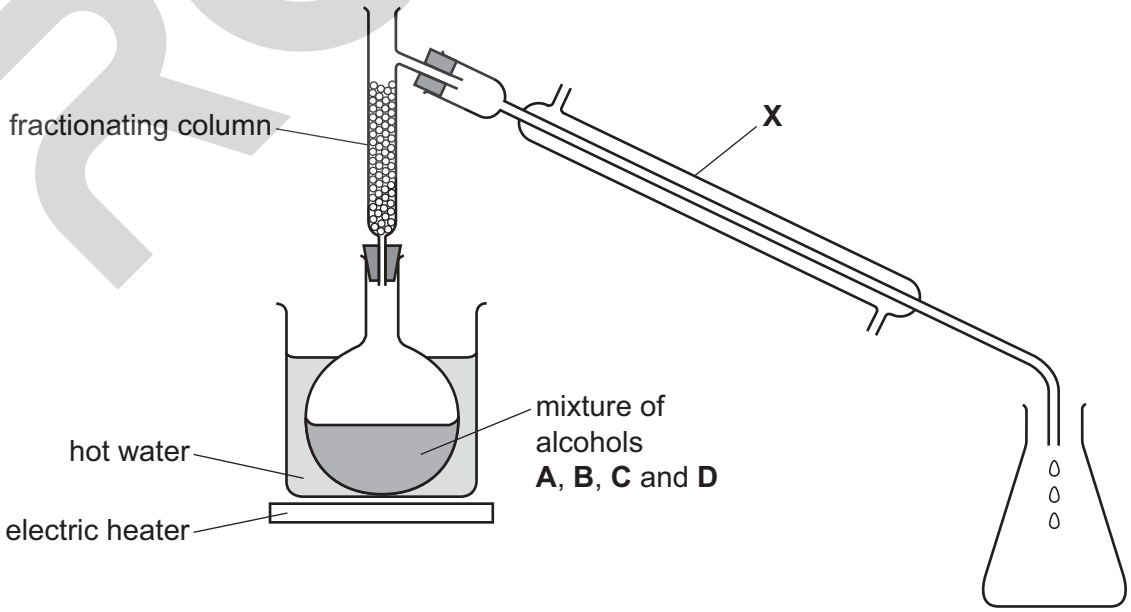

© UCLES 2018
www.root19.com

+91 - 9969 353 391

(i) Apparatus **X** needs to have cold water flowing through it.

- Draw an arrow on the diagram to show where the cold water enters apparatus **X**.
- Name apparatus **X**.

.....
[2]

(ii) Part of the fractionating column is missing. This means that the experiment will not work.

- Draw on the diagram the part of the fractionating column which is missing.
- Explain why the experiment will **not** work with this part of the fractionating column missing.

.....

.....
[2]

(iii) Suggest why a Bunsen burner is **not** used to heat the flask.

..... [1]

(iv) A hot water bath cannot be used to separate alcohols **C** and **D**.

Explain why.

.....

.....

..... [2]

[Total: 13]

© UCLES 2018
www.root19.com

+91 - 9969 353 391

2 Flerovium, F*l*, atomic number 114, was first made in research laboratories in 1998.

(a) Flerovium was made by bombarding atoms of plutonium, Pu, atomic number 94, with atoms of element **Z**.

- The nucleus of **one** atom of plutonium combined with the nucleus of **one** atom of element **Z**.
- This formed the nucleus of **one** atom of flerovium.

Suggest the identity of element **Z**.

..... [1]

(b) In which period of the Periodic Table is flerovium?

..... [1]

(c) Predict the number of outer shell electrons in an atom of flerovium.

..... [1]

(d) Two isotopes of flerovium are ^{286}F*l* and ^{289}F*l*. The nuclei of both of these isotopes are unstable and emit energy when they split up.

(i) State the term used to describe isotopes with unstable nuclei.

..... [1]

(ii) Complete the table to show the number of protons, neutrons and electrons in the atoms of the isotopes shown.

isotope	number of protons	number of neutrons	number of electrons
^{286}F*l*			
^{289}F*l*			

[2]

(e) Only a relatively small number of atoms of flerovium have been made in the laboratory and the properties of flerovium have not yet been investigated.

It has been suggested that flerovium is a typical metal.

(i) Suggest **two** physical properties of flerovium.

1 .....

2 .....

[2]

(ii) Suggest **one** chemical property of flerovium oxide.

..... [1]

[Total: 9]

© UCLES 2018
www.root19.com

+91 - 9969 353 391

3 This question is about iron.

(a) Three of the raw materials added to a blast furnace used to extract iron from hematite are coke, hematite and limestone.

Name **one** other raw material added to the blast furnace.

..... [1]

(b) A series of reactions occurs in a blast furnace during the extraction of iron from hematite.

Describe these reactions.
Include:
- **one** chemical equation for the reduction of hematite
- **one** chemical equation for the formation of slag.

.....

.....

.....

.....

.....

.....

.....

..... [5]

(c) The iron extracted from hematite using a blast furnace is impure.

Identify the main impurity in this iron and explain how it is removed in the steel-making process.

main impurity .....

how it is removed .....

.....

..... [3]

[Total: 9]

© UCLES 2018
www.root19.com

+91 - 9969 353 391

4 This question is about masses, volumes and moles.

(a) Which term is defined by the following statement?

The average mass of naturally occurring atoms of an element on a scale where the ^{12}C atom has a mass of exactly 12 units.

..... [1]

(b) Butane, C_4H_{10}, has a relative **molecular** mass of 58.
Potassium fluoride, KF, has a relative **formula** mass of 58.

Explain why the term relative molecular mass can be used for butane but **cannot** be used for potassium fluoride.

.....

..... [2]

(c) A 0.095 g sample of gaseous element **Y** occupies 60.0 cm^3 at room temperature and pressure.

- Determine the number of moles of element **Y** in 60.0 cm^3.

moles of element **Y** = ... mol

- Calculate the relative molecular mass of element **Y** and hence suggest the identity of element **Y**.

relative molecular mass = ...

identity of element **Y** = ...
[3]

© UCLES 2018
www.root19.com

+91 - 9969 353 391

(d) A 1.68 g sample of phosphorus was burned and formed 3.87 g of an oxide of phosphorus.

Calculate the empirical formula of this oxide of phosphorus.

empirical formula = ... [4]

(e) Another oxide of phosphorus has the empirical formula P_2O_3.
One molecule of this oxide of phosphorus contains four atoms of phosphorus.

Calculate the mass of **one** mole of this oxide of phosphorus.

mass = ... g [2]

[Total: 12]

© UCLES 2018
www.root19.com

+91 - 9969 353 391

5 **(a)** The table gives some chemical properties of transition elements and their compounds, and of Group I elements and their compounds.

chemical property	transition elements	Group I elements
ability to act as catalysts	yes	no
exist as coloured compounds	yes	no

(i) What is meant by the term *catalyst*?

.....

.....

..... [2]

(ii) Give **one** other chemical property shown by transition elements which is **not** shown by Group I elements.

..... [1]

(b) Give **two** physical properties shown by transition elements which are **not** shown by Group I elements.

1 .....

2 .....
[2]

(c) The energy level diagram shows the energy profile for the reaction between zinc and dilute sulfuric acid.

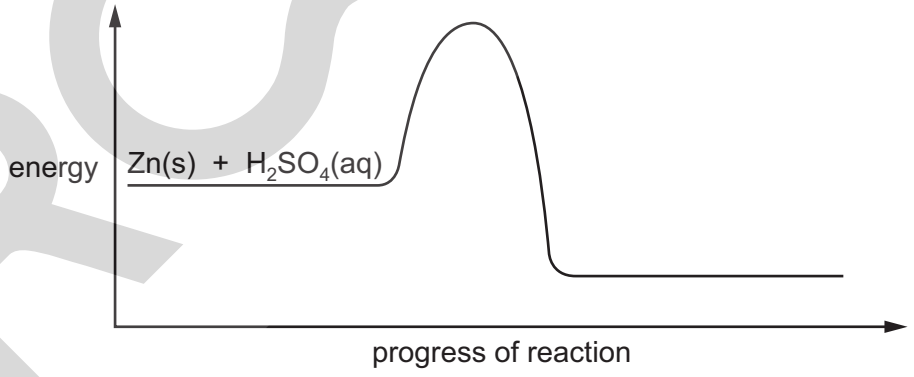

(i) Complete the diagram by adding the formulae of the products. Include state symbols. [3]

(ii) Draw an arrow on the diagram to represent the activation energy. [1]

(iii) Is the reaction endothermic or exothermic? Explain your answer.

.....

..... [1]

www.root19.com +91 - 9969 353 391

(d) The reaction between zinc and dilute sulfuric acid can be catalysed by the addition of aqueous copper(II) sulfate.

On the diagram, add the energy profile for the catalysed reaction.

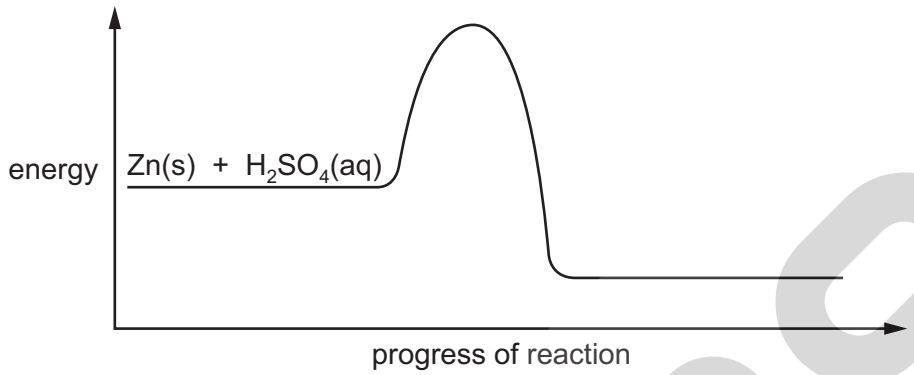

[1]

(e) A student electrolyses aqueous copper(II) sulfate using the apparatus shown.

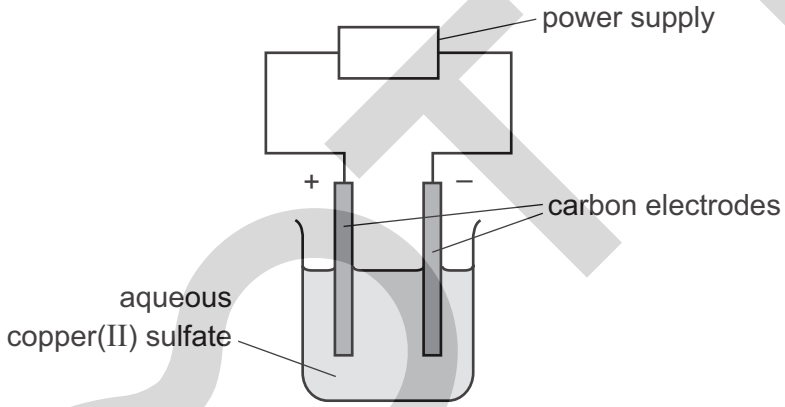

Oxygen gas forms at the positive electrode (anode).

(i) Write an ionic half-equation for the reaction at the negative electrode (cathode). Include state symbols.

..... [3]

(ii) Describe what the student observes at the negative electrode.

..... [1]

(iii) Give **two other** observations which the student makes during the electrolysis.

1 .....

2 .....

[2]

(iv) What difference would the student observe at the positive electrode if the aqueous copper(II) sulfate were replaced by concentrated aqueous copper(II) chloride?

..... [1]

[Total: 18]

www.root19.com +91 - 9969 353 391

6 The table shows the structures of four hydrocarbons.

P	Q	R	S
$CH_3–CH_3$	$CH_2=CH_2$	$CH_2=CH–CH_3$	$CH_2=CH–CH_2–CH_3$

(a) Why are compounds **P**, **Q**, **R** and **S** known as hydrocarbons?

.....

..... [2]

(b) Compound **P** is saturated.

What is meant by the term *saturated*?

.....

..... [1]

(c) Compound **P** undergoes a substitution reaction with chlorine.

(i) What is meant by the term *substitution reaction*?

.....

..... [1]

(ii) State a condition required for this reaction to occur.

..... [1]

(iii) Write a chemical equation for this reaction.

..... [2]

(d) Compound **R** undergoes an addition reaction with bromine.

(i) Why is this reaction an addition reaction?

..... [1]

(ii) A compound containing bromine is formed in this reaction.

Draw the structure of this compound. Show all of the atoms and all of the bonds.

[1]

© UCLES 2018
www.root19.com

+91 - 9969 353 391

(e) Draw the structure of an unbranched isomer of compound **S**. Show all of the atoms and all of the bonds. Name this unbranched isomer of compound **S**.

structure

name ..... [2]

(f) Compound **Q** undergoes polymerisation.

(i) Name the polymer formed.

..... [1]

(ii) Complete the chemical equation to show the polymerisation of compound **Q**.

$n\ CH_2{=}CH_2 \rightarrow$

[2]

(g) Amino acids undergo polymerisation to form proteins. Part of a protein molecule with the linkages missing is shown.

Draw the linkages on the diagram. Show all of the atoms and all of the bonds.

[2]

(h) The structure shows an ester.

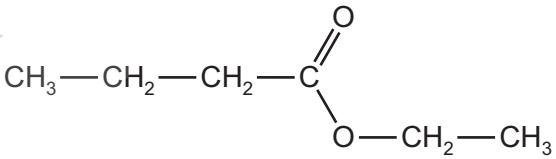

Write the word equation for a reaction which could be used to make this ester.

..... [3]

[Total: 19]

To avoid the issue of disclosure of answer-related information to candidates, all copyright acknowledgements are reproduced online in the Cambridge International Examinations Copyright Acknowledgements Booklet. This is produced for each series of examinations and is freely available to download at www.cie.org.uk after the live examination series.

The Periodic Table of Elements

Key

atomic number
atomic symbol
name
relative atomic mass

Group I	Group II											Group III	Group IV	Group V	Group VI	Group VII	Group VIII
							1 **H** hydrogen 1										2 **He** helium 4
3 **Li** lithium 7	4 **Be** beryllium 9											5 **B** boron 11	6 **C** carbon 12	7 **N** nitrogen 14	8 **O** oxygen 16	9 **F** fluorine 19	10 **Ne** neon 20
11 **Na** sodium 23	12 **Mg** magnesium 24											13 **Al** aluminium 27	14 **Si** silicon 28	15 **P** phosphorus 31	16 **S** sulfur 32	17 **Cl** chlorine 35.5	18 **Ar** argon 40
19 **K** potassium 39	20 **Ca** calcium 40	21 **Sc** scandium 45	22 **Ti** titanium 48	23 **V** vanadium 51	24 **Cr** chromium 52	25 **Mn** manganese 55	26 **Fe** iron 56	27 **Co** cobalt 59	28 **Ni** nickel 59	29 **Cu** copper 64	30 **Zn** zinc 65	31 **Ga** gallium 70	32 **Ge** germanium 73	33 **As** arsenic 75	34 **Se** selenium 79	35 **Br** bromine 80	36 **Kr** krypton 84
37 **Rb** rubidium 85	38 **Sr** strontium 88	39 **Y** yttrium 89	40 **Zr** zirconium 91	41 **Nb** niobium 93	42 **Mo** molybdenum 96	43 **Tc** technetium –	44 **Ru** ruthenium 101	45 **Rh** rhodium 103	46 **Pd** palladium 106	47 **Ag** silver 108	48 **Cd** cadmium 112	49 **In** indium 115	50 **Sn** tin 119	51 **Sb** antimony 122	52 **Te** tellurium 128	53 **I** iodine 127	54 **Xe** xenon 131
55 **Cs** caesium 133	56 **Ba** barium 137	57–71 lanthanoids	72 **Hf** hafnium 178	73 **Ta** tantalum 181	74 **W** tungsten 184	75 **Re** rhenium 186	76 **Os** osmium 190	77 **Ir** iridium 192	78 **Pt** platinum 195	79 **Au** gold 197	80 **Hg** mercury 201	81 **Tl** thallium 204	82 **Pb** lead 207	83 **Bi** bismuth 209	84 **Po** polonium –	85 **At** astatine –	86 **Rn** radon –
87 **Fr** francium –	88 **Ra** radium –	89–103 actinoids	104 **Rf** rutherfordium –	105 **Db** dubnium –	106 **Sg** seaborgium –	107 **Bh** bohrium –	108 **Hs** hassium –	109 **Mt** meitnerium –	110 **Ds** darmstadtium –	111 **Rg** roentgenium –	112 **Cn** copernicium –		114 **Fl** flerovium –		116 **Lv** livermorium –		

lanthanoids	57 **La** lanthanum 139	58 **Ce** cerium 140	59 **Pr** praseodymium 141	60 **Nd** neodymium 144	61 **Pm** promethium –	62 **Sm** samarium 150	63 **Eu** europium 152	64 **Gd** gadolinium 157	65 **Tb** terbium 159	66 **Dy** dysprosium 163	67 **Ho** holmium 165	68 **Er** erbium 167	69 **Tm** thulium 169	70 **Yb** ytterbium 173	71 **Lu** lutetium 175
actinoids	89 **Ac** actinium –	90 **Th** thorium 232	91 **Pa** protactinium 231	92 **U** uranium 238	93 **Np** neptunium –	94 **Pu** plutonium –	95 **Am** americium –	96 **Cm** curium –	97 **Bk** berkelium –	98 **Cf** californium –	99 **Es** einsteinium –	100 **Fm** fermium –	101 **Md** mendelevium –	102 **No** nobelium –	103 **Lr** lawrencium –

The volume of one mole of any gas is 24 dm^3 at room temperature and pressure (r.t.p.).

© UCLES 2018
+91 - 9969 353 391
www.prootl9.com